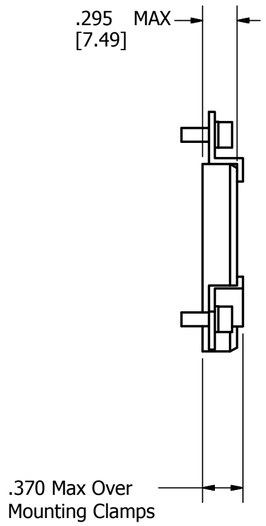

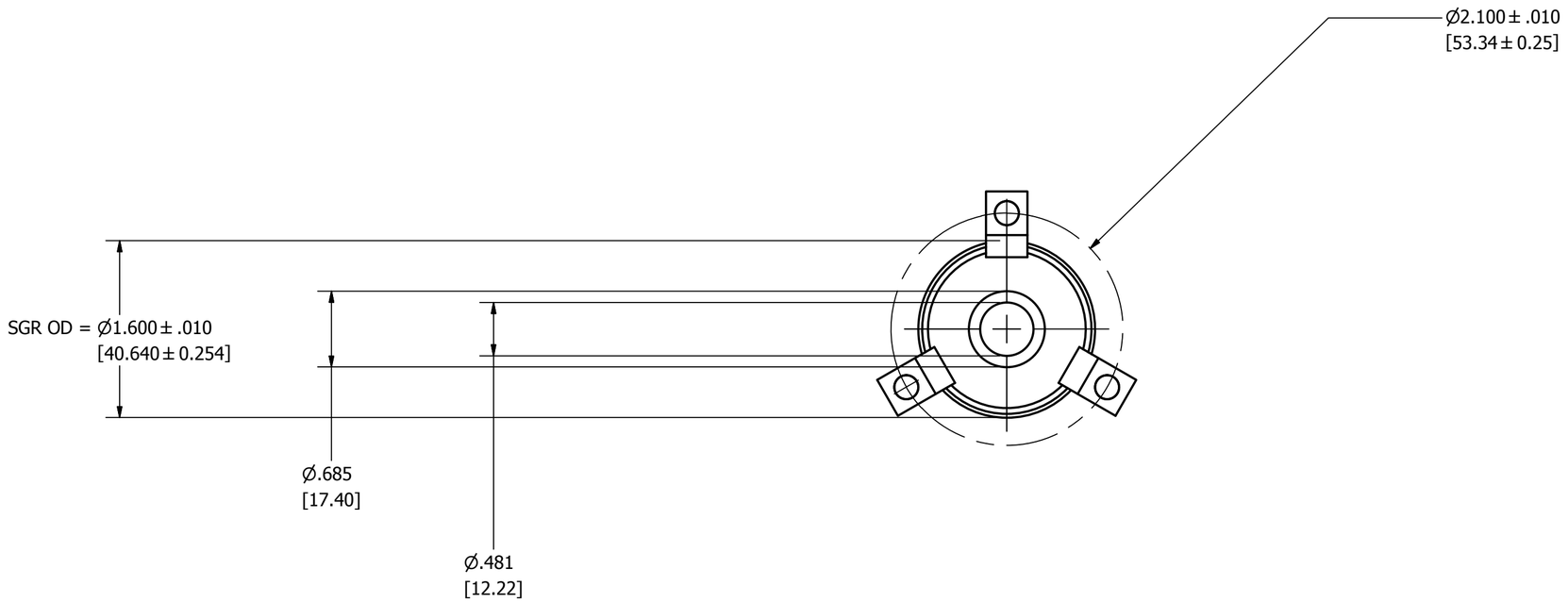

Notes:

Supplied with:

3, Standard Mounting Clamps and

3, M3 x 0.5 x 8mm SHCS With Appropriate Lock Washers

Conductive Micro-Fiber To Suit
0.521 [13.23] to 0.56 [14.22] Shaft Diameters

Patented Technology US Patent 8,199,453; 8,169,766; 7,193,836

THEREIN, ARE THE EXCLUSIVE PROPERTY OF ELECTRO STATIC TECHNOLOGY ISSUED IN STRICT CONFIDENCE AND SHALL NOT WITHOUT CONSENT, BE REPRODUCED, COPIED OR USED FOR ANY PURPOSE WHATSOEVER, EXCEPT BUSINESS WITH E.S.T.

UNLESS OTHERWISE SPECIFIED
DIMENSIONS ARE IN:
inch [mm]

UNTOLERANCED DIMENSIONS
± .010 [0.254mm]

DATE: 2/25/2014

ENGINEER: A. Gen

ELECTRO STATIC TECHNOLOGY
AN ITW COMPANY
31 WINTERBROOK ROAD, MECHANIC FALLS, MAINE 04256
PHONE (207)998-5140 FAX (207)998-5143

AEGIS® SGR w/ clips

PART NUMBER: SGR-12.2-2

REV A